Specification (Test Condition, 25℃)

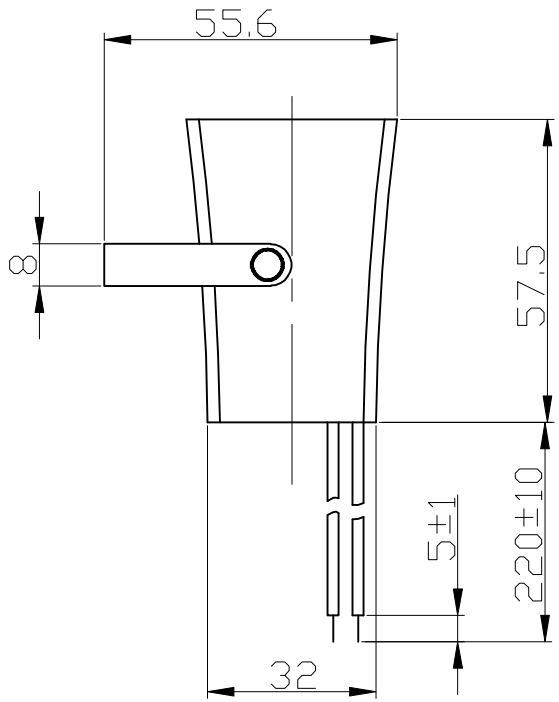

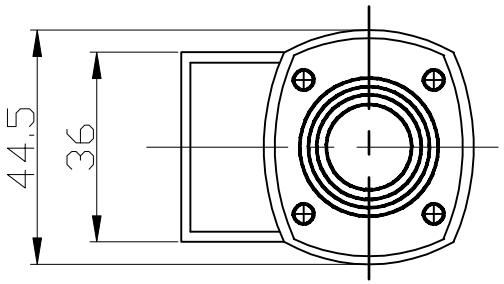

1. Housing Material/ Color..... ABS /Black
2. Power Rating RMS ..... 10 W
3. Power Rating Peak ..... 15 W
4. Rated Voltage ..... 12 VDC
5. Range Voltage ..... 6–16 VDC
6. S.P.L. ..... min. 95 dB(at 1 meter, 12VDC)
7. Current Draw ..... 130 mA Max.(at 12 VDC)
8. Resonat Frequency..... 1.5-3.5KHz
9. Load Test ..... 8 Hours (at 12 VDC)
10. Heat Test ..... 8 Hours (at 85℃)
11. Operating Temperature range ..... -20 ~ +85℃
12. Wires Connection ..... Red +12V
    ..... Black GND
13. Weight ..... 65±5 g

No.	DESCRIPTION	APPROVED	DATE

APPROVALS	DATE
DRAWN	
CHECKED	
APPROVED	03.08.01

Piezo Siren

UNIT mm | DWG NO. | SCALE NOT TO SCALE | SHEET | VER 1.0