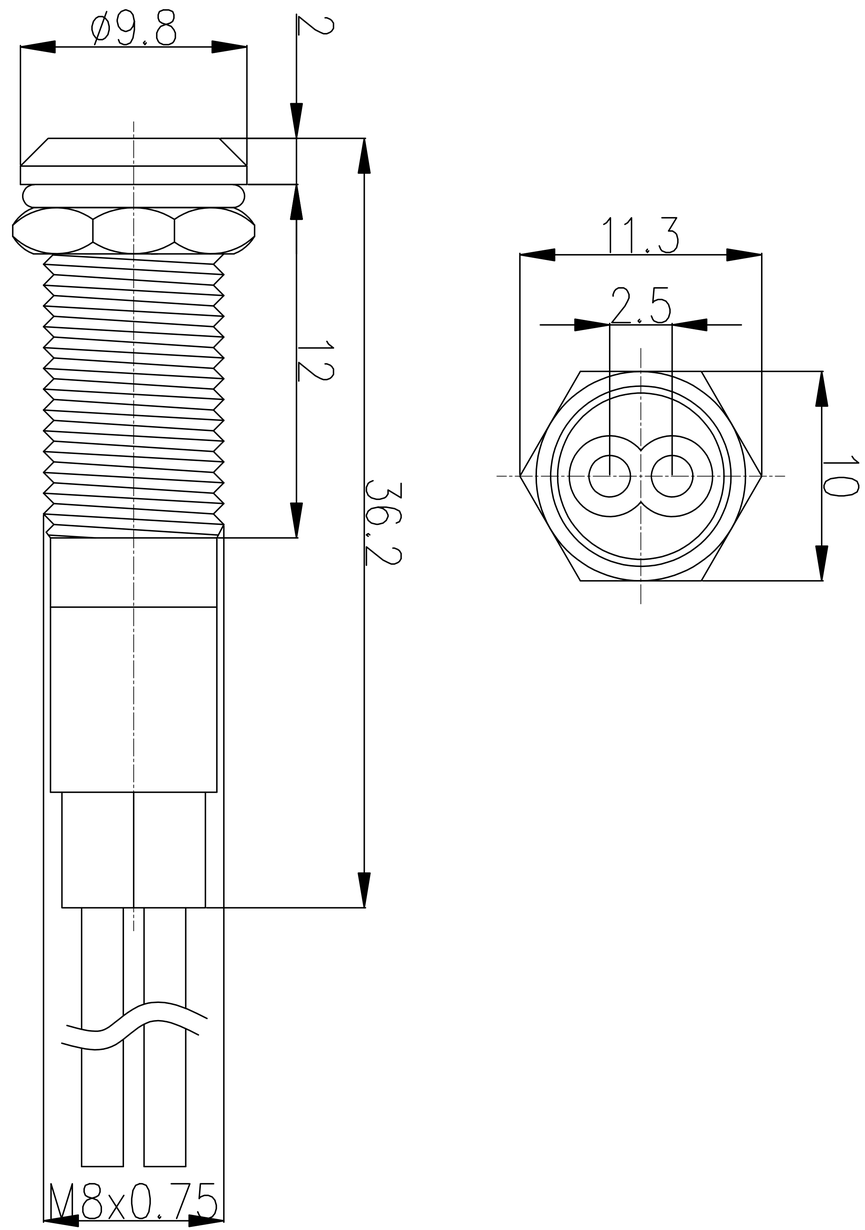
ø9.8
2
12
36.2
M8x0.75
11.3
2.5
10