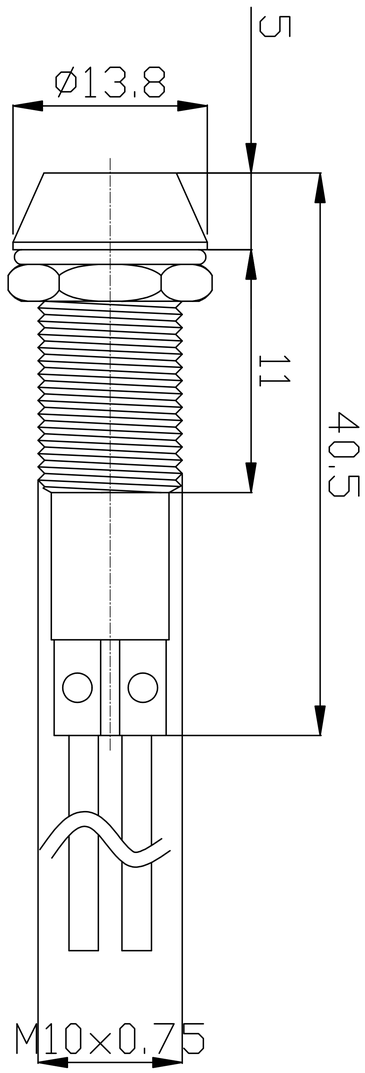
5
ø13.8
11
40.5
M10×0.75

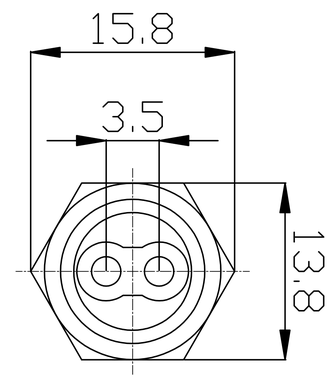
15.8
3.5
13.8