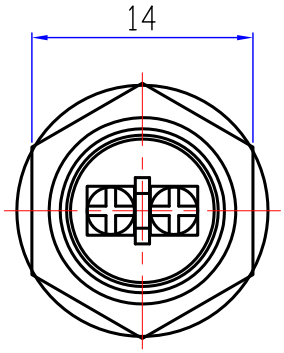
14

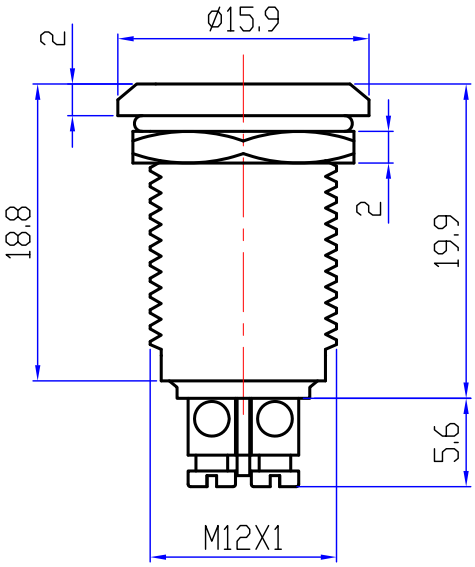
ø15.9
2
18.8
2
19.9
5.6
M12X1

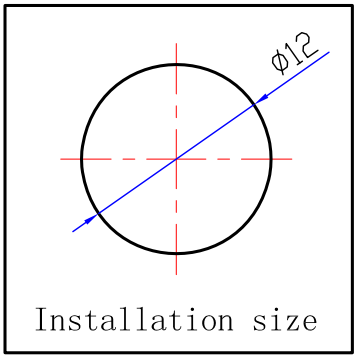
ø12
Installation size

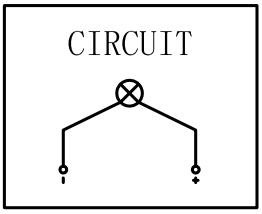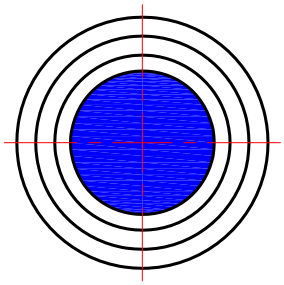
CIRCUIT
-
+