TR Z02.60/09 II

Outline Drawing

1、Physical Dimension (UNIT: mm)

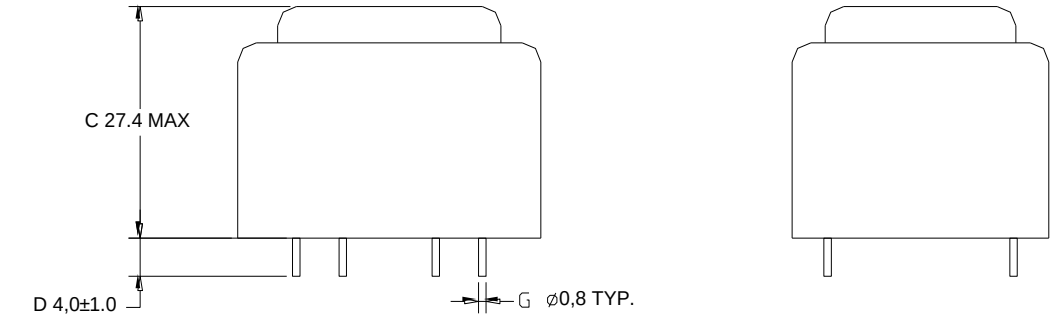

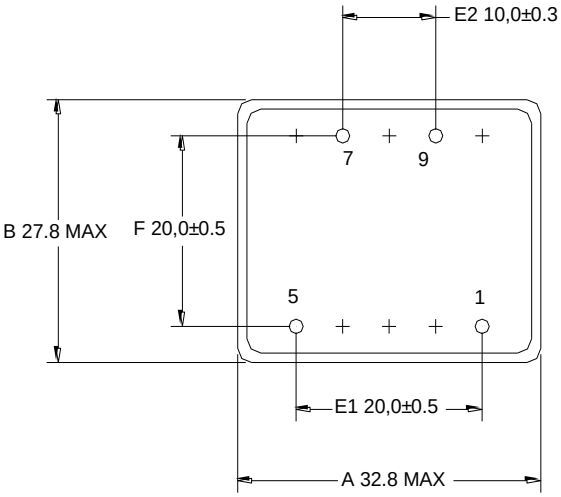

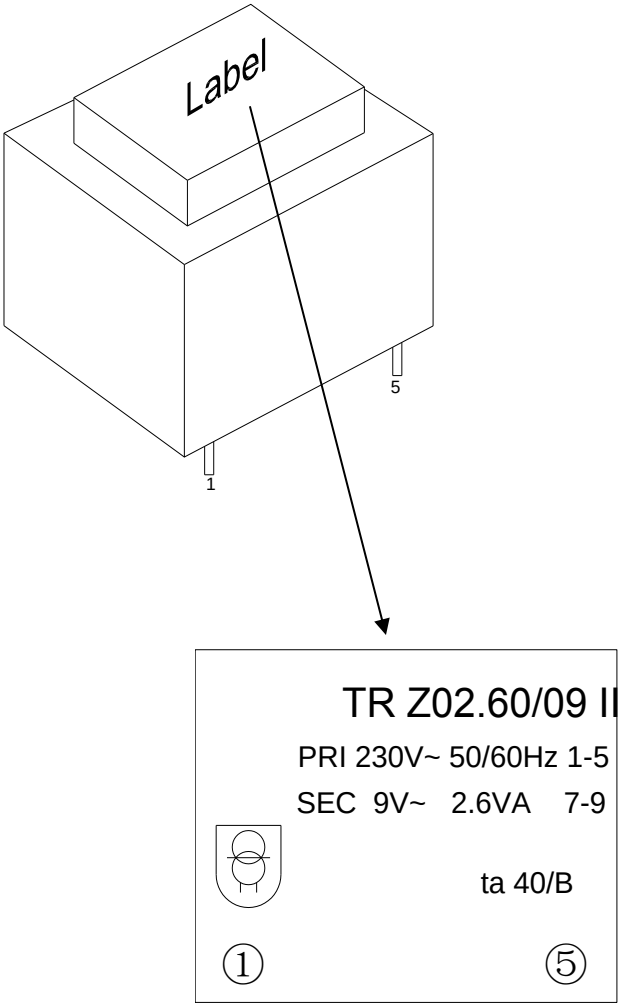

Electrical Performance

1、SAFETY STANDARD　　CORE SIZE: EI-30

2、ELECTRICAL PERFORMANCE:

2-1. PRIMARY RATED VOLTAGE: AC 230 V / 50 Hz

EXCITING CURRENT: 20 mA MAX.

2-2. SECONDARY RATED VOLTAGE AND CURRENT:

	UNLOAD VOLTAGE(I)	LOADING VOLTAGE	RATED CURRENT	DC RESISTANCE T=25℃
P: 1--5				
S: 7--9	17V AC Max	9V AC ±10%	289mA	

3、INSULATION RESISTANCE TEST:

500V DC 100MΩ min.FOR 1 MIN.(PRODUCTION LINE FOR 2S.) (PRI-SEC.& PRI.-CORE)

4、HI-POT TEST:

SHALL WITHSTAND WITHOUT BREAKDOWN

AC 3.75 KV FOR 1 MIN. OR AC 4.2 KV FOR 1S.(PRI.-SEC.& PRI.-CORE.)
(CUT-OFF CURRENT 1 mA)

5、TEMPERATURE RISE TEST:(Ta=25℃ INPUT 230V 50Hz)

PRI.& SEC.WINDING'S TEMPERATURE RISE 45℃ MAX.AT RATED LOAD. (RESISTANCE METHOD)

6、ELECTRICAL SCHEMATIC:

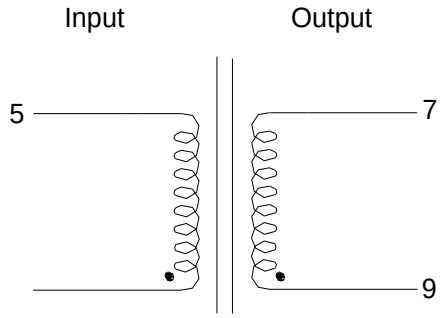

7, MAJOR MEASUREMENT FACILITIES

A、DC-RESISTANCE METER: TH2512B

B、VOLTMETER: GDW4033A

C、AMPEREMETER: GDW4033A

D、TURN RATIO DETECTOR: YG-108R

E、HI-POT TESTER: CS5603

F、INSULATION-RESISTANCE METER: CS5603

G、MILIVOLTMETER: FLUCK 287

H、MULTI-FUNCTION OSCILLOSCOPE: DS-8608A

8、THE ABOVE-MENTIONED MEASUREMENT IS BASED ON THE BEGINNING OF AMBIENT TEMPERATURE.

9、Products comply with RoHS requirements.

9、Net Weight: 98 g/PCS