D1RFRD006

REVISION RECORD				
REV	ECN	DESCRIPTION	DRFT	DATE
1		to change the clip according to customer request	LYK	05/31/07"
2		to increase the R angle 0.3	Hang	01/21/08"
3		change parameter	L.JH	11/19/08"
4		change DIM, imprevoment break.	Yej	04/28/09"
5		change construction	L.JH	05/20/09"
6	10-0247	customer requirement	PengWu	08/13/10"

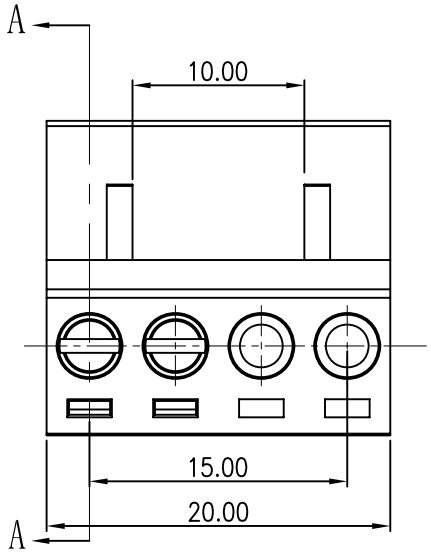

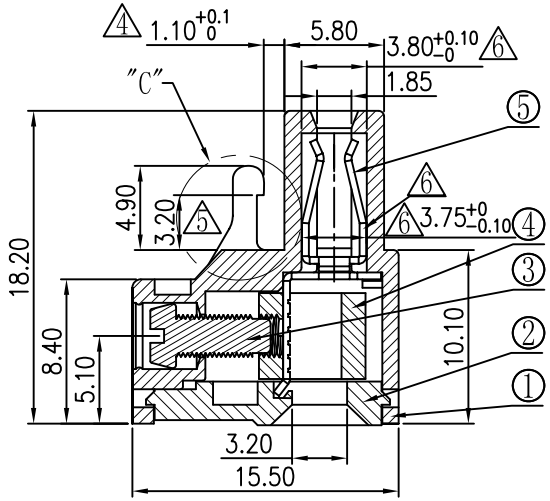

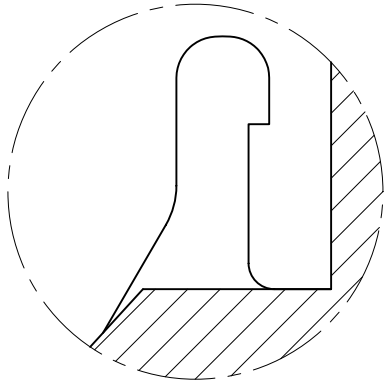

5 Detial"C" Scale(3:1)

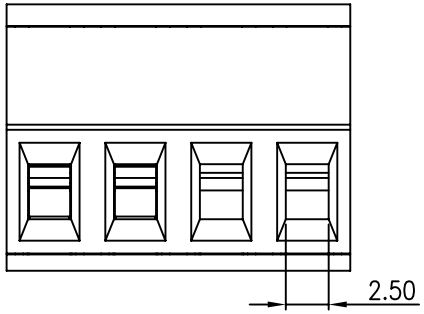

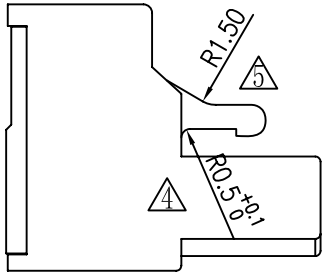

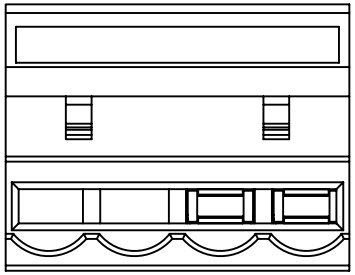

Notes:

1. Pitch:5.0mm ,Poles:2P
2. Rated voltage/current:UL1059 300V/15A
   IEC 320V/20A 3
3. Operation temperatures:-40℃～+105℃
4. Withstanding Voltage:AC2000V/1Min
5. Insulation Resistance:5000MΩ/DC1000V
6. Wire Range:28～12AWG,2.5mm² 3
7. Max.Torque Value:M2.5,4.08kgf.cm
8. Undimensioned Tolerances:

Pitch range in mm			Naminal dimension range in mm					—
to 6	over 6 to 10	over 10 to 24	to 30	over 30 to 60	over 60 to 100	over 100 to 150	over 150	⌒ ▱
±0.10	±0.15	±0.25	±0.2	±0.3	±0.5	±0.7	±1.0	0.05/10

ITEM	NAME OF PART	NO. OF PART	Q"TY	MATERIAL	NOTES
5	2EDGP-CLAMP	1046B00020(H)	2	Bronze	SnCe
4	DG128 BRASS CAGE	X000000020(H)	2	Brass	Ni plated
3	2EDG"-"screw-M2.5	S000001370(H)	2	Steel	$Cr^{3+}Zn$
2	2EDGP-5.0 cover	1046C0Y04A(H)	1	PA66	UL94V-0
1	2EDGP-5.0 housing	1046A0Y04C(H)	1	PA66	UL94V-0

DETACHED LISTS

MM (INCH)

TOLERANCES EXCEPT AS NOTED

MM	
.0 ±	±
.00 ±	±
.000 ±	±

ANGLES ± 1°

THIRD ANGLE PROJECTION

DFTO LYK	DATE 04/25/07"
CHKD	DATE
MFO	DATE
APPVL	DATE
MATERIAL :	
G.E :	
FINISH :	
SCALE : 1:1	

DEGSON®
宁波高正电子有限公司
DEGSON ELECTRONICS CO., LTD

NAME (插PCB式)
2EDGP-5.0-02P-1Y-10A(H)

DRAWING NO. 2EDGP-5.0-E05
/PART NO.

SIZE A4 | REV T6 08/13/10"

DO NOT SCALE DRAWING | SHEET 1 OF 1